CCS 3200 BASIC CONNECTION DIAGRAM

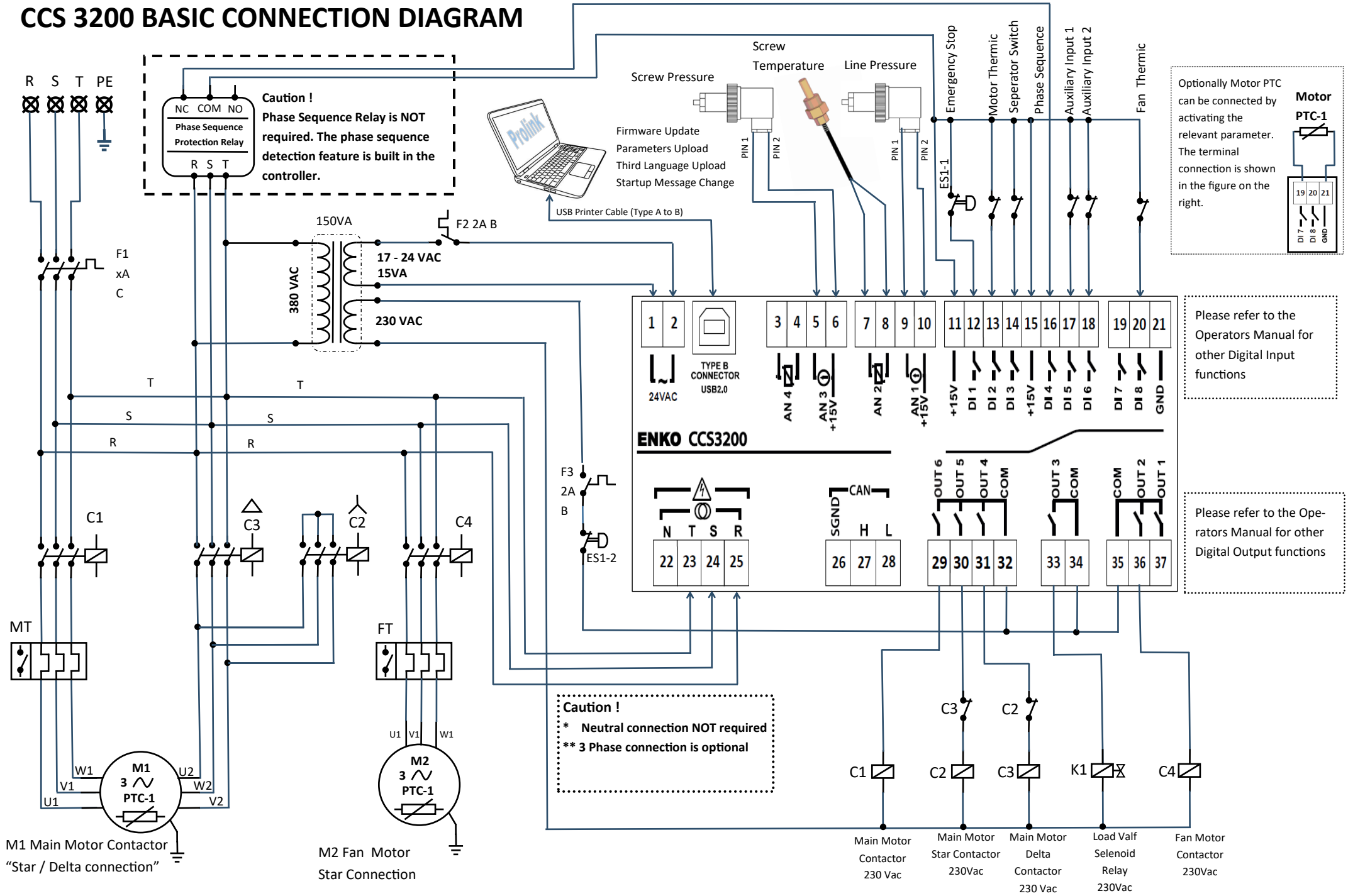

Revision Date : 13.09.2021